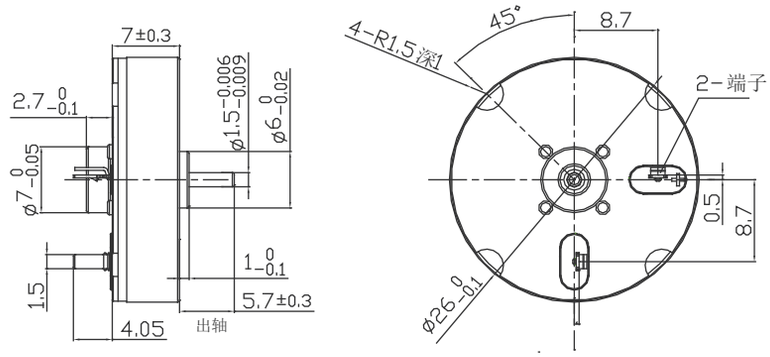

电机参数 Motor specifications		03A	04A	08A	01A
1 额定电压 (Nominal voltage)	V	6.0	9.0	12.0	12.0
2 空载转速 (No load speed)	rpm	7300	10900	6050	10650
3 空载电流 (No load current)	mA	15	20	6	20
4 额定转速 (Nominal speed)	rpm	5475	8175	4537	7987
5 额定转矩 (Nominal torque)	mNm	1.8	2.71	1.74	2.70
6 额定电流 (Nominal current)	A	0.24	0.36	0.1	0.27
7 堵转转矩 (Stall torque)	mNm	7.0	10.6	39.3	10.8
8 堵转电流 (Stall current)	A	0.92	1.38	7.95	1
9 相间电阻 (Terminal resistance)	Ω	6.54	6.54	32.74	11.96
10 转矩常数 (Torque constant)	mNm/A	7.69	7.73	4.84	10.55
11 速度常数 (Speed constant)	rpm/V	1216	1211	1933	887
12 机械时间常数 (Mechanical time constant)	ms	1.6	1.6	1.7	1.5
13 转子惯量 (Rotor inertia)	gcm^2	0.156	0.156	0.19	0.15

可配减速箱 Optional gearbox

可配编码器 Optional encoder

其他参数 Other specifications

工作温度范围 (Operating temperature range)	-20...+80°C	轴承类型 (Bearing type)	滚珠轴承 (Ball bearing)
极对数 (Number of pole pairs)	2	电刷类型 (Brush type)	贵金属刷 (Precious metal brushes)
换向器片数 (Number of commutator segments)	6	电机重量 (Weight of motor)	20.12g